PROXILIS PRO

Access control readers

13.56 MHz proximity readers

Secured, Adaptable and Evolving

The PROXILIS PRO reader belongs to a new generation of 13.56 MHz readers. Completely secure, multi-protocol and programmable, it is the first reader which can completely adapt to all data reading and identification strategies.

PROXILIS PRO is progressive and universal: It supports all card models (Mifare, Mifare+, Desfire, ICAO, CD21, SLE88, Calypso...), of this fact perpetuating the installation and preserving the investment.

This reader integrates symmetrical and asymmetrical cryptographic resources and its local processing unit (LPU) connections are secured. Similar to a Bank Card reader, it fills all security gaps and gives the customer complete control of the system.

THE PLUS POINTS

Stylish

With its ultra-slim design, available in several colours, and its ambient lighting to provide good visibility in the dark, PROXILIS can be fitted easily and advantageously in buildings.

Environmentally friendly

With a power consumption level much lower than other readers on the market (0.25 W), PROXILIS contributes to improving the energy efficiency of buildings.

Available in several versions

The PROXILIS reader also exists in a slim shape (for door posts) and in an anti-vandal version. A remote antenna model for specific integrations is also available.

Principles & Functionalities

- Ideal for companies who have already defined a precise need in terms of cards and multi-applications (biometrics, cafeteria...).
- All «read and write» card models, mappings and cryptographics (symmetrical and asymmetrical).
- The application can be downloaded via the communication line or with an NFC telephone or a PDA, and executed in a separate secured memory space.
- Programmable by customers (SDK delivered) or development software from TIL.
- Wiegand/DataClock or encrypted RS485 communication with presence control between the reader and the LPU.

The range of readers PROXILIS ECO, STD and PRO

PROXILIS	PROXILIS SLIM	PROXILIS ANTI-VANDAL

PROXILIS PRO

Access control readers

13.56 MHz proximity readers

Mechanical dimensions

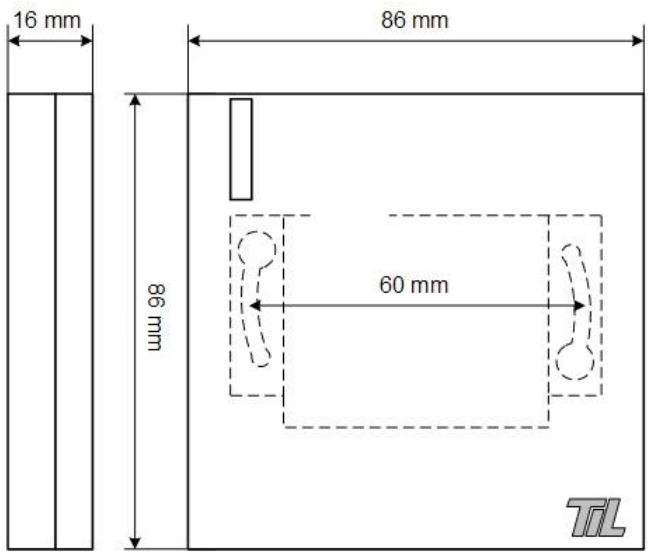

Standards & Compliance

Standards :

- Standards ISO14443 A, B and B', ISO18092 Level 1 to 4
- DES, 3DES, AES, RSA, ECC, SHA Cryptographics
- Memory for keys and secure crypto-processor ELA4+

Cards :

- All cards (Mifare Classic, Mifare +, Desfire, ICAO, SLE88, CD21...)

References

PROXILIS PRO reader:

- **LEC05MF2500-XB5:** square indoor reader, secured, all cards, all programs, RS485, black
- **LEC05MF2500-XB0:** square indoor reader, secured, all cards, all programs, Wiegand/DataClock, black

Plastic covers - standard colours

- **CAP05MF2000-G :** square plastic cover, grey
- **CAP05MF2000-B :** square plastic cover, white
- **CAP05MF2000-BL :** square plastic cover, blue
- **CAP05MF2000-VI :** square plastic cover, purple
- **CAP05MF2000-MR :** square plastic cover, brown

Other colours upon request

- Additional cost is a fixed sum
- Minimum quantity required to launch production.

Detailed features

- Power supply:
  12 VDC (9 to 15 VDC)
- Average consumption:
  0.25 W
- Operating frequency:
  13.56 MHz
- Max. distance between the module and the reader:
  600 m
- Communication interface:
  RS485 encrypted, live signal or Wiegand/DataClock
- Connectors:
  4-pin terminal included
- Materials:
  ABS
- Dimensions:
  86 x 86 x 16 mm
- Mounting:
  Wall mounted or in flush-mounted box 80 mm, 2 screws 4 mm
- Reading distance:
  Up to 8 cm depending on the card technology
- Signalling:
  - White mood lighting
  - Controllable red/green leds
  - Integrated buzzer
- Operating temperature:
  from -20°C to +70°C
- Weight:
  0.10 kg

FPR_PROXILIS-PRO_EN - July 2013 - Information is not contractual and may be changed without prior notice

Your distributor

Contact Commercial > info@til-technologies.fr
Contact Marketing > marketing@til-technologies.fr